# BLIZZARD REV:A

## PCB SN:100300210601

## L=6, 147 x 102 mm(5.8" x 4")

| PAGE | TITLE |
|---|---|
| P01 | Index |
| P02 | Power Distribution & M-SD |
| P03 | OTG-USB & USB-HUB & Client |
| P04 | USB to SATA & ADV7180 |
| P05 | 4.3" TTL PANEL |
| P06 | LVDS PANEL |
| P07 | 7" TTL PANEL |
| P08 | Amplifier & VGA |
| P09 | UART & RS422/485 & IR |
| P10 | Video Decoder 5146 |
| P11 | Sil9022A |
| P12 | Expansion CONN. |

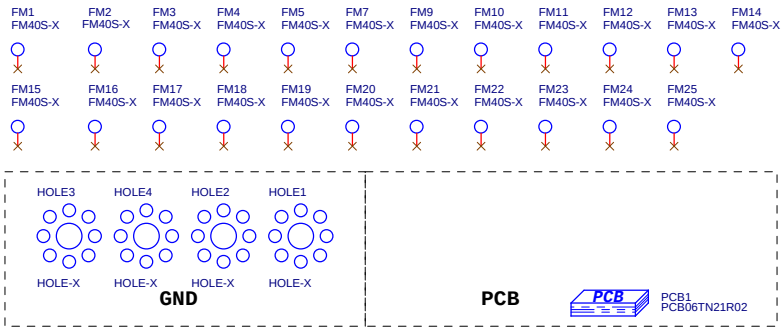

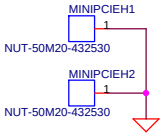


| | | |
|---|---|---|
| TechNexion | | |
| Title: INDEX | | |
| Size: Custom | Document Number: BLIZZARD | Rev: A |
| Date: Wednesday, August 24, 2011 | Sheet 1 of 12 | |

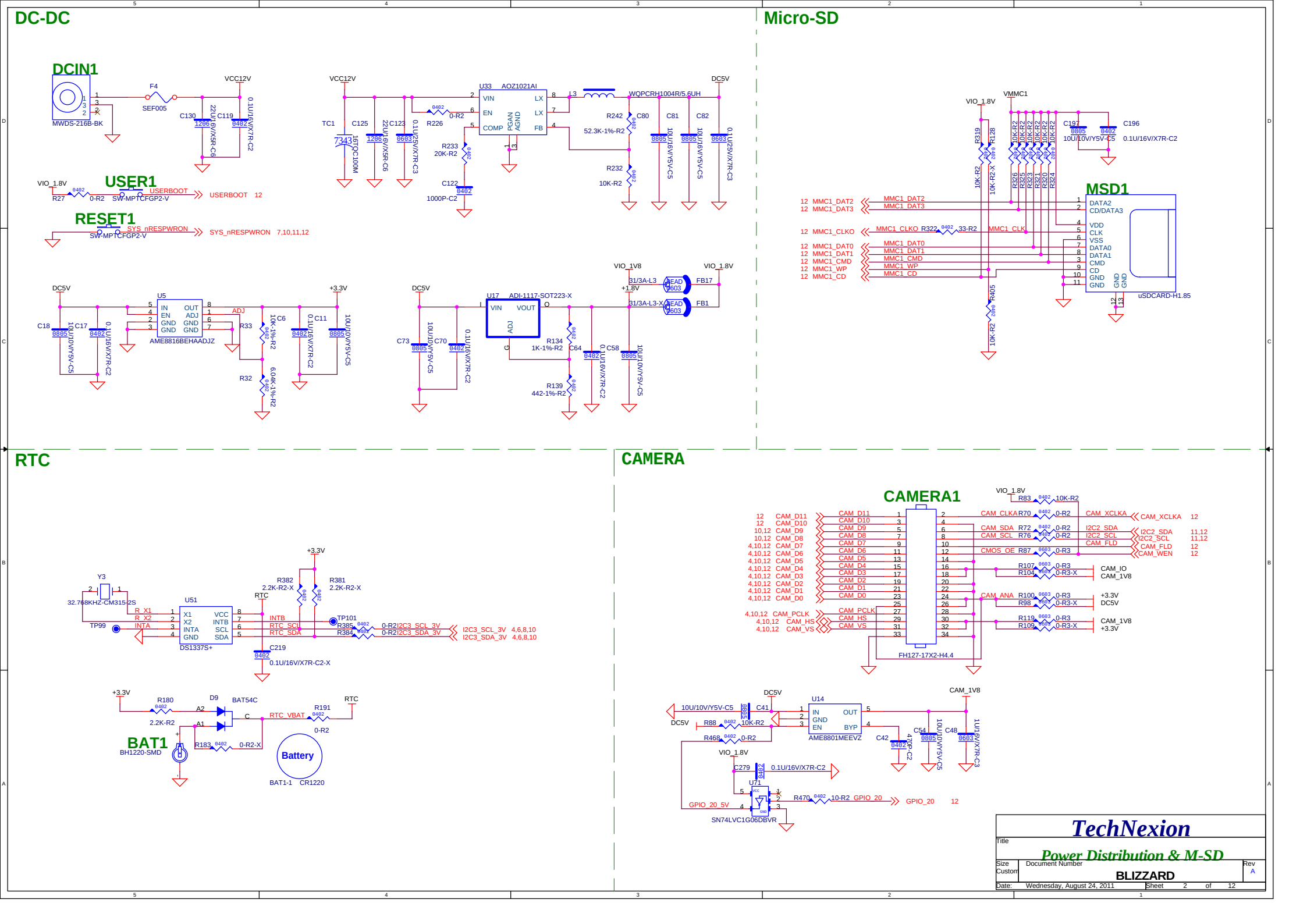
DC-DC
DCIN1
MWDS-216B-BK
F4
SEF005
VCC12V
C130
C119
USER1
SW-MPTCFGP2-V
USERBOOT
USERBOOT 12
VIO_1.8V
R27
0-R2
RESET1
SYS_nRESPWRON
SYS_nRESPWRON 7,10,11,12
U33 AOZ1021AI
VIN
EN
COMP
LX
FB
PGAN
AGND
TC1
C125
C123
R226
R233
20K-R2
C122
1000P-C2
L3
WQPCRH1004R/5.6UH
R242
52.3K-1%-R2
R232
10K-R2
C80
C81
C82
DC5V
U5
AME8816BEHAADJZ
IN
OUT
EN
ADJ
GND
ADJ
R33
R32
6.04K-1%-R2
C6
C11
+3.3V
C18
C17
U17 ADJ-1117-SOT223-X
VIN
VOUT
ADJ
C73
C70
R134
1K-1%-R2
C64
R139
442-1%-R2
C58
VIO_1V8
+1.8V
31/3A-L3
31/3A-L3-X
FB17
FB1
Micro-SD
VMMC1
VIO_1.8V
R319
R128
10K-R2
10K-R2-X
R326
R325
R323
R321
R320
R324
C197
C196
10U/10V/Y5V-C5
0.1U/16V/X7R-C2
MSD1
DATA2
CD/DATA3
VDD
CLK
VSS
DATA0
DATA1
CMD
CD
GND
uSDCARD-H1.85
MMC1_DAT2
MMC1_DAT3
MMC1_CLKO
MMC1_CLKO R322
33-R2
MMC1_CLK
MMC1_DAT0
MMC1_DAT1
MMC1_CMD
MMC1_WP
MMC1_CD
R405
RTC
Y3
32.768KHZ-CM315-2S
TP99
U51
DS1337S+
X1
X2
INTA
VCC
INTB
SCL
SDA
R_X1
R_X2
INTA
INTB
RTC_SCL
RTC_SDA
R382
2.2K-R2-X
R381
2.2K-R2-X
TP101
R385
R384
0-R2
I2C3_SCL_3V
I2C3_SDA_3V
I2C3_SCL_3V 4,6,8,10
I2C3_SDA_3V 4,6,8,10
C219
0.1U/16V/X7R-C2-X
R180
2.2K-R2
D9
BAT54C
A2
A1
C
RTC_VBAT
R191
0-R2
R183
0-R2-X
BAT1
BH1220-SMD
Battery
BAT1-1 CR1220
CAMERA
CAMERA1
FH127-17X2-H4.4
CAM_D11
CAM_D10
CAM_D9
CAM_D8
CAM_D7
CAM_D6
CAM_D5
CAM_D4
CAM_D3
CAM_D2
CAM_D1
CAM_D0
CAM_PCLK
CAM_HS
CAM_VS
CAM_CLKA
CAM_SDA
CAM_SCL
CMOS_OE
CAM_ANA
CAM_XCLKA
I2C2_SDA
I2C2_SCL
CAM_FLD
CAM_WEN
CAM_IO
CAM_1V8
+3.3V
DC5V
R83
10K-R2
R70
R72
R76
R87
R107
R104
R100
R98
R119
R109
U14
AME8801MEEVZ
IN
GND
EN
OUT
BYP
C41
R88
R468
C42
C54
C48
CAM_1V8
C279
0.1U/16V/X7R-C2
U71
SN74LVC1G06DBVR
R470
10-R2
GPIO_20_5V
GPIO_20
TechNexion
Title
Power Distribution & M-SD
Size
Custom
Document Number
BLIZZARD
Rev
A
Date: Wednesday, August 24, 2011
Sheet 2 of 12

# USB-HUB

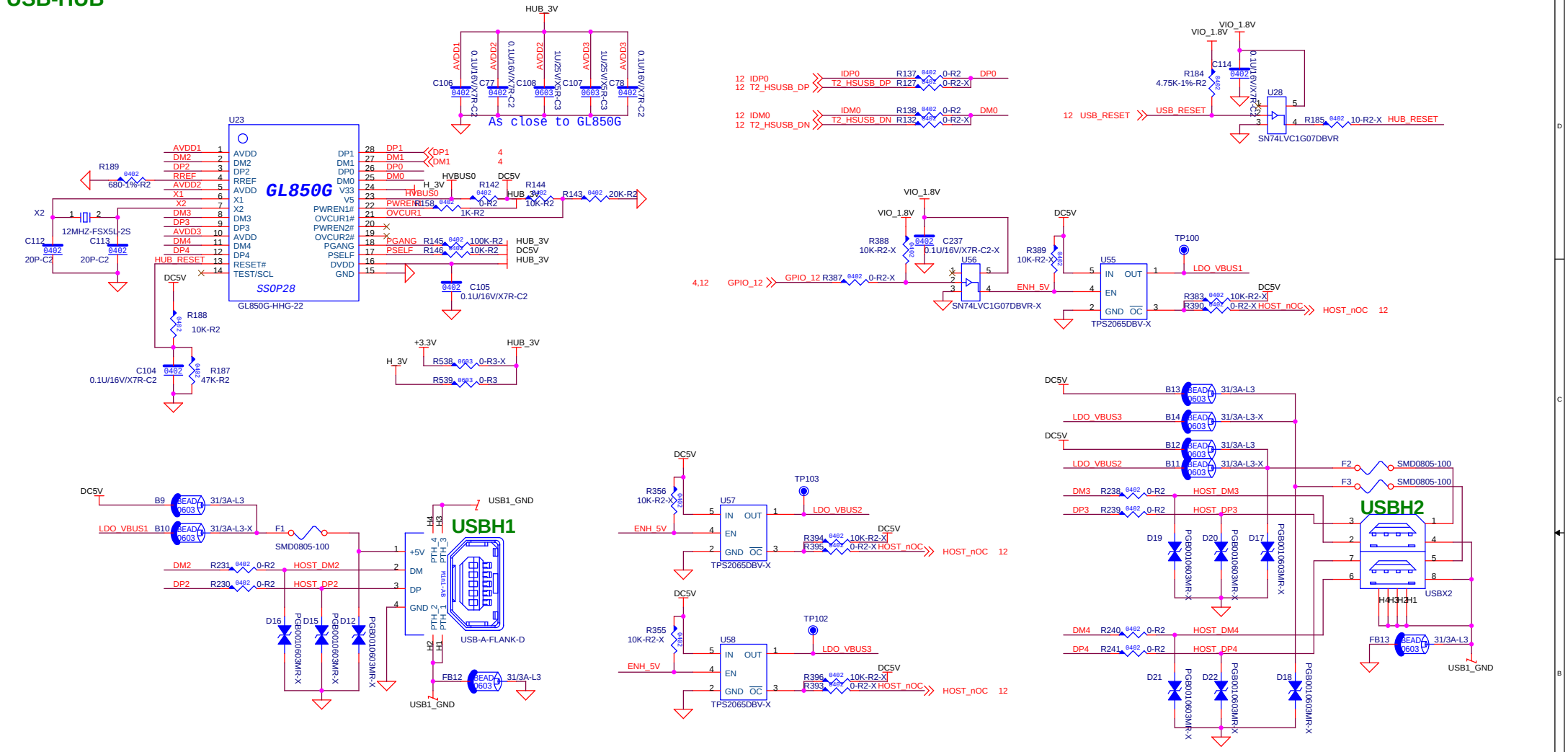


# USB-CLIENT

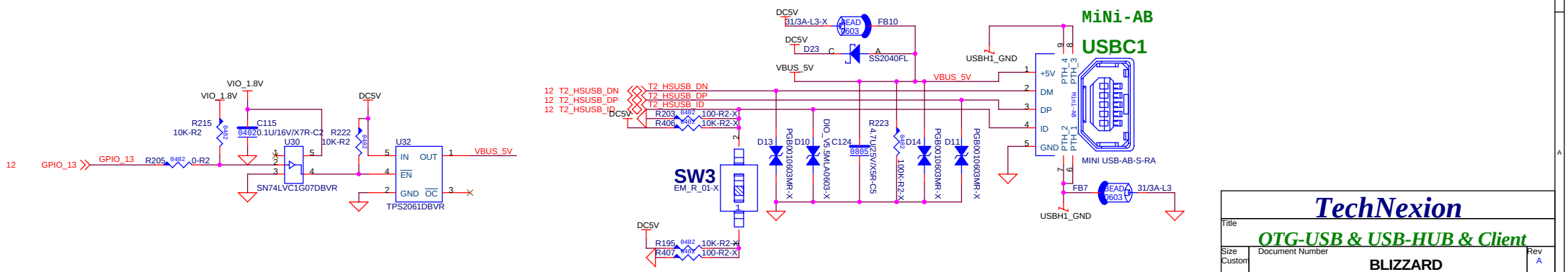


| | | |
|---|---|---|
| TechNexion | | |
| Title | OTG-USB & USB-HUB & Client | |
| Size Custom | Document Number BLIZZARD | Rev A |
| Date: Wednesday, August 24, 2011 | Sheet 3 of 12 | |

# USB TO 3G

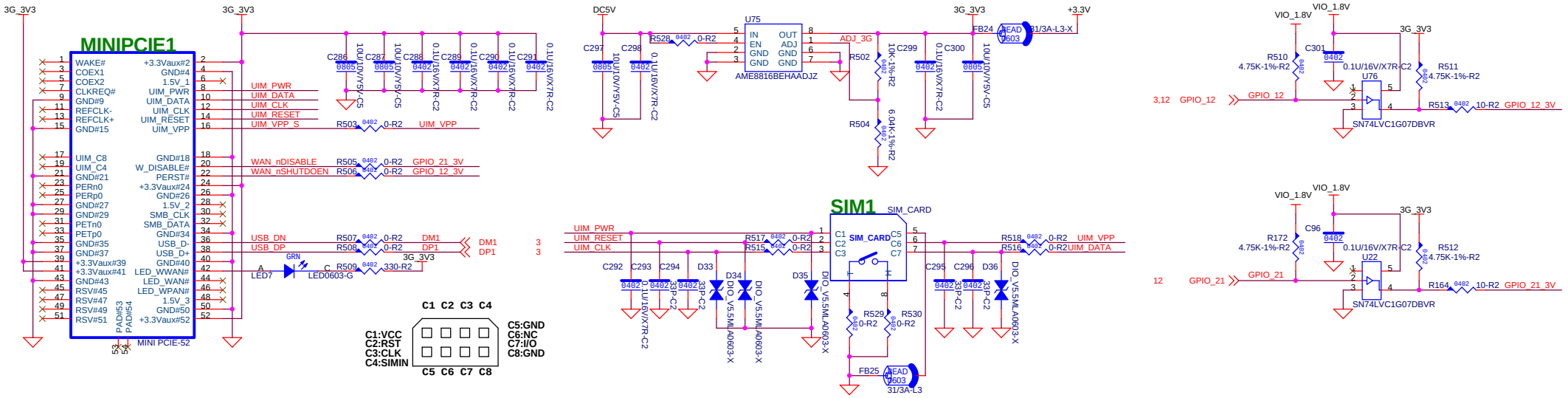


# TV COMPOSITE

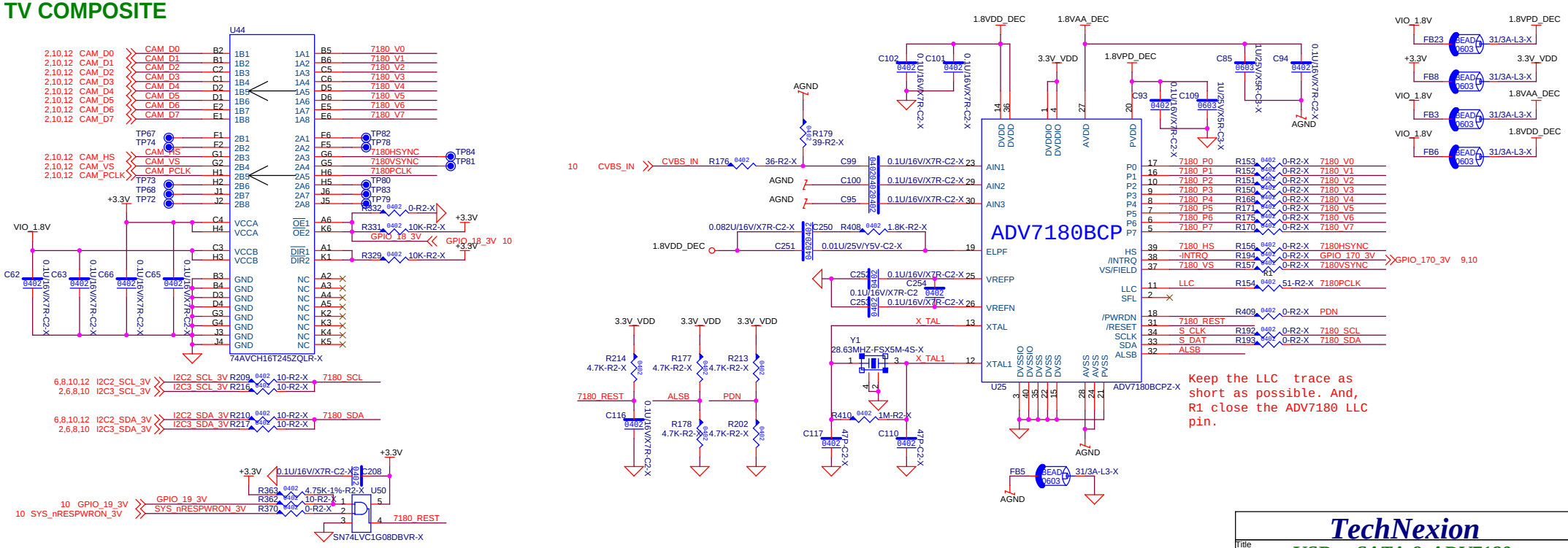


Keep the LLC trace as short as possible. And, R1 close the ADV7180 LLC pin.

| | |
|---|---|
| TechNexion | |
| Title | USB to SATA & ADV7180 |
| Size Custom | Document Number BLIZZARD |
| Rev | A |
| Date: Wednesday, August 24, 2011 | Sheet 4 of 12 |

# 4.3" TTL Panel

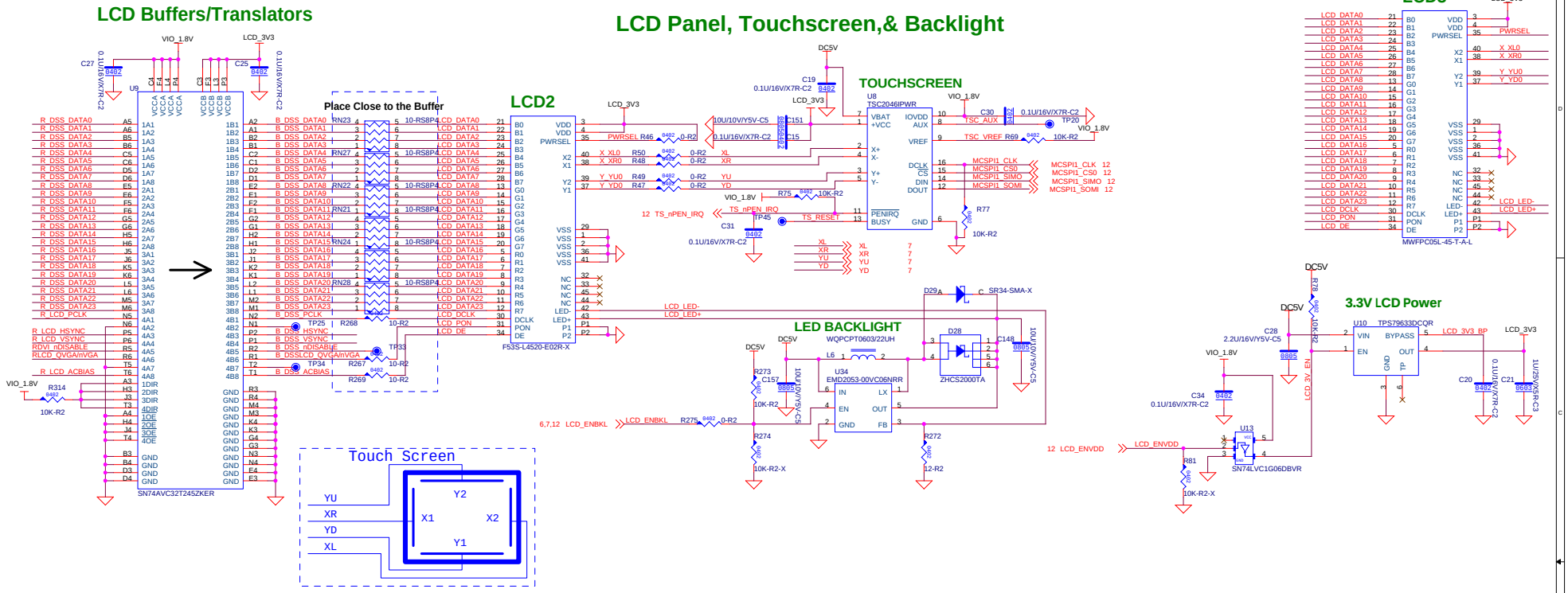


# TTL

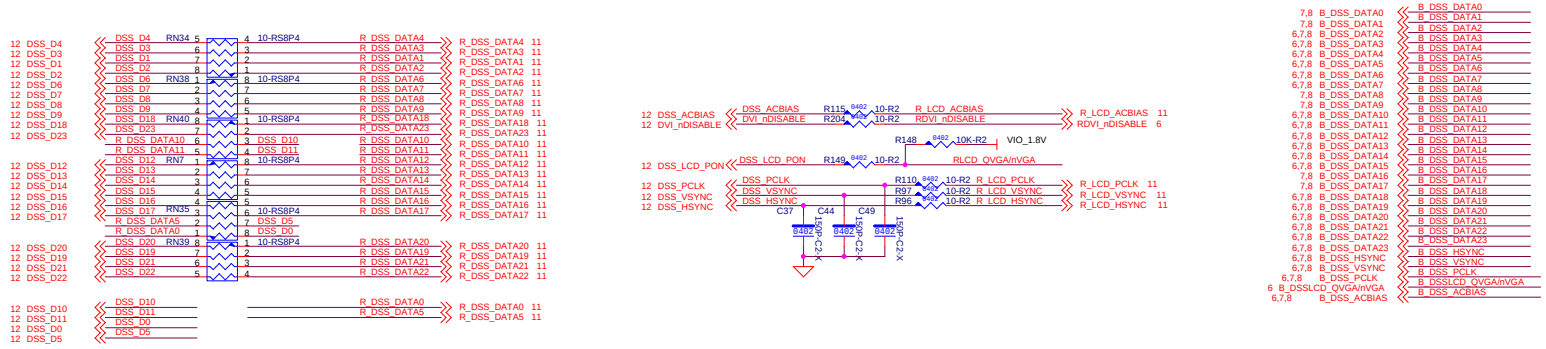

| | |
|---|---|
| TechNexion | |
| Title | TTL |
| Size C | Document Number BLIZZARD |
| Rev | A |
| Date: Wednesday, August 24, 2011 | Sheet 5 of 12 |

# 18Bit LVDS

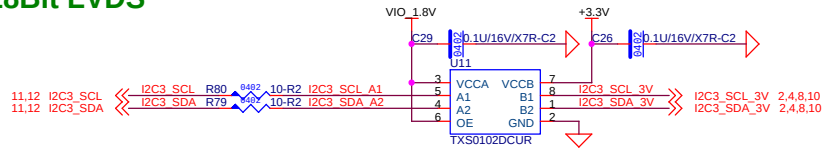


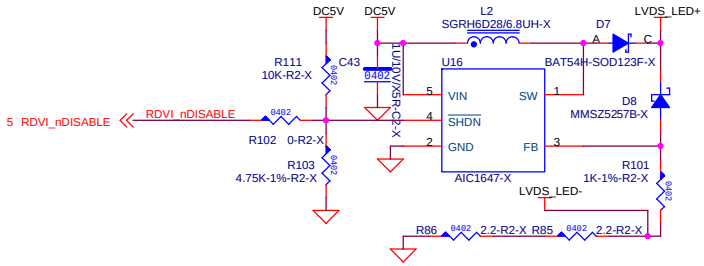


## Place Close to the Buffer

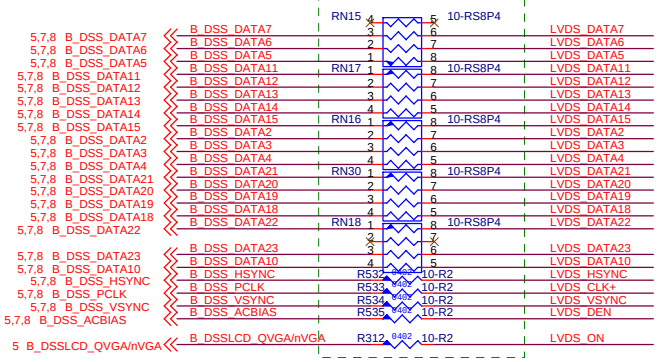


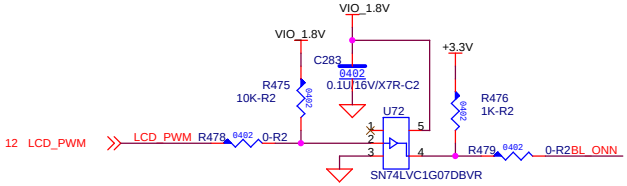


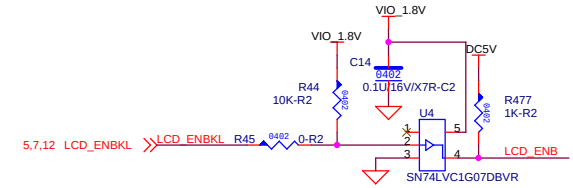


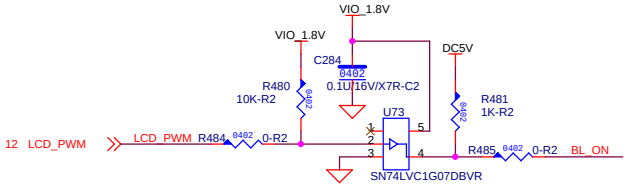


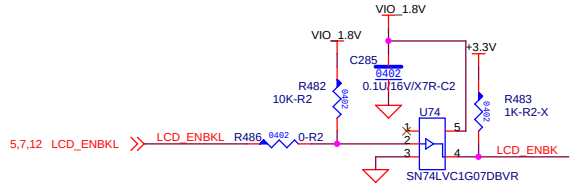


## LVDS TRANSMITTER

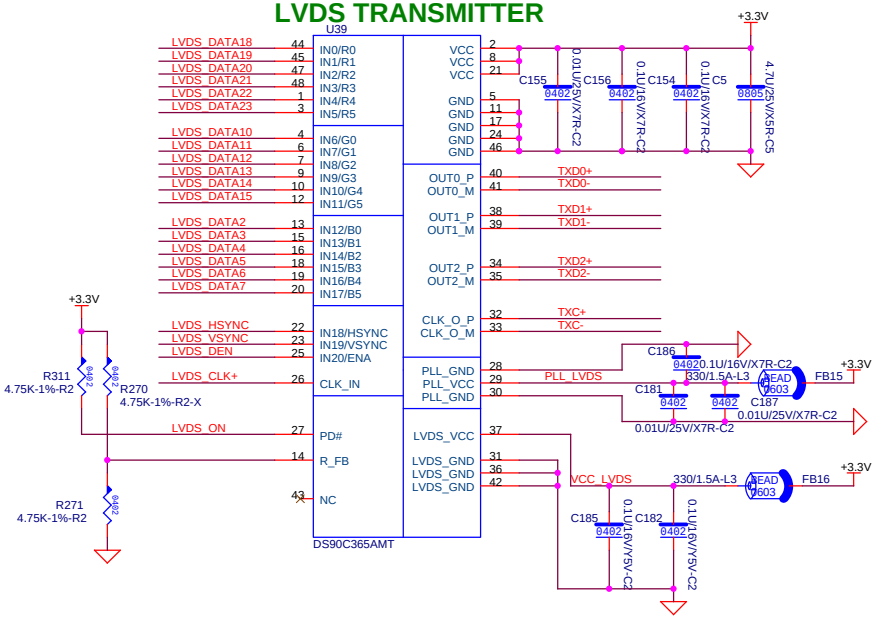


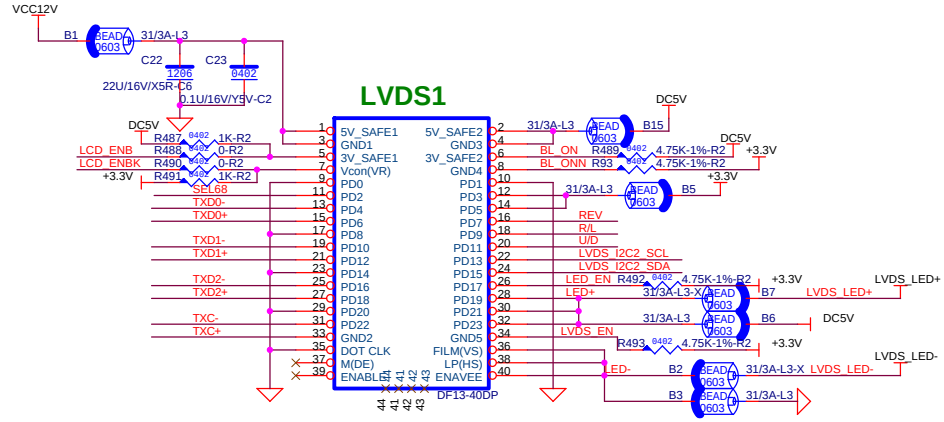


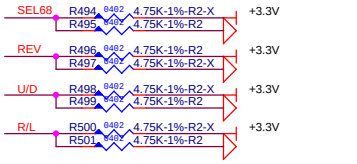


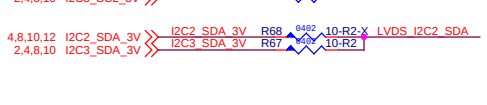


| | |
|---|---|
| TechNexion | |
| Title | LVDS PANEL |
| Size Custom | Document Number BLIZZARD |
| Rev | A |
| Date: Wednesday, August 24, 2011 | Sheet 6 of 12 |

# 7" TTL PANEL

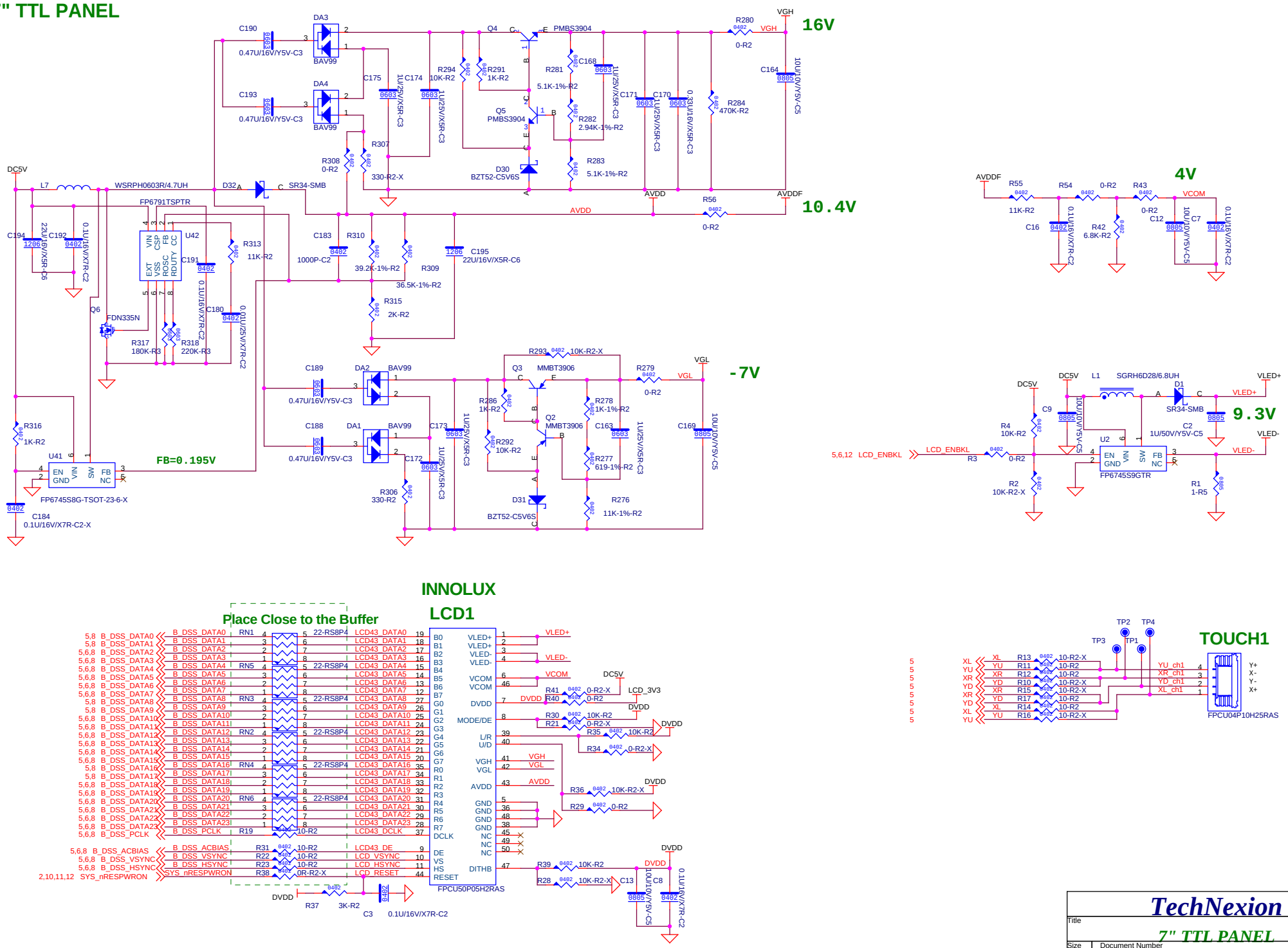


| | |
|---|---|
| TechNexion | |
| Title | 7" TTL PANEL |
| Size Custom | Document Number BLIZZARD |
| Rev | A |
| Date: Wednesday, August 24, 2011 | Sheet 7 of 12 |

# Audio-AMP

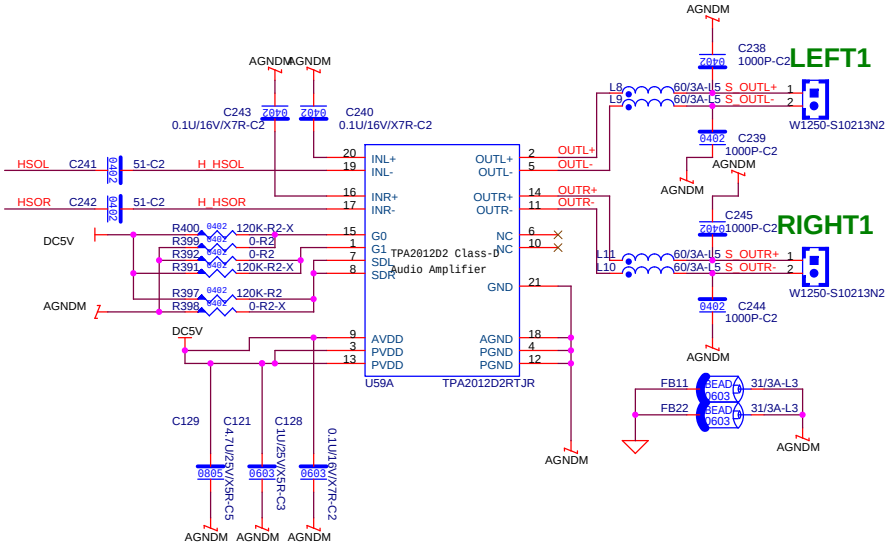


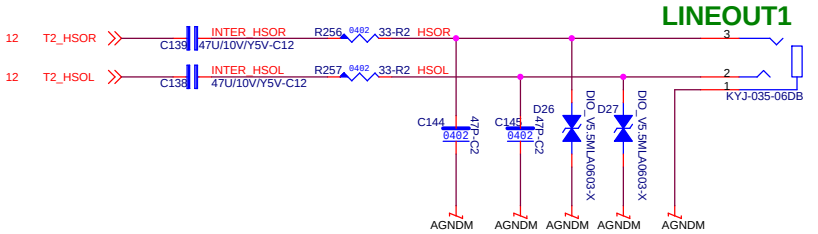


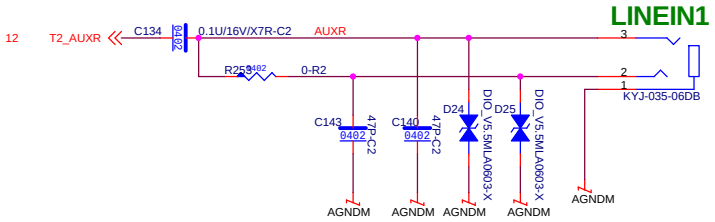


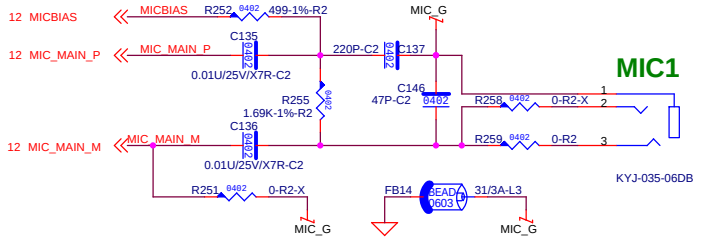


# TTL to VGA

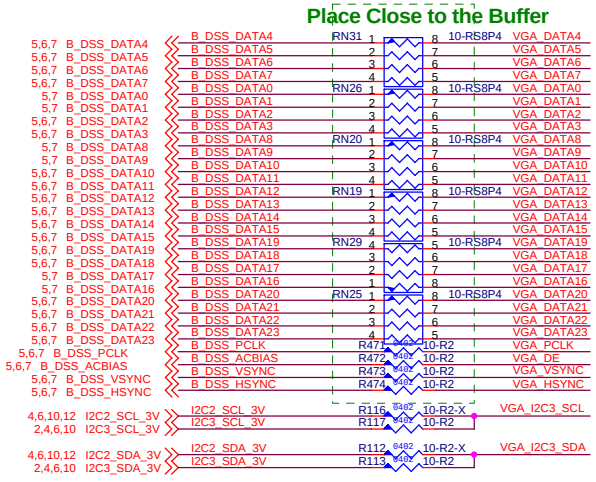


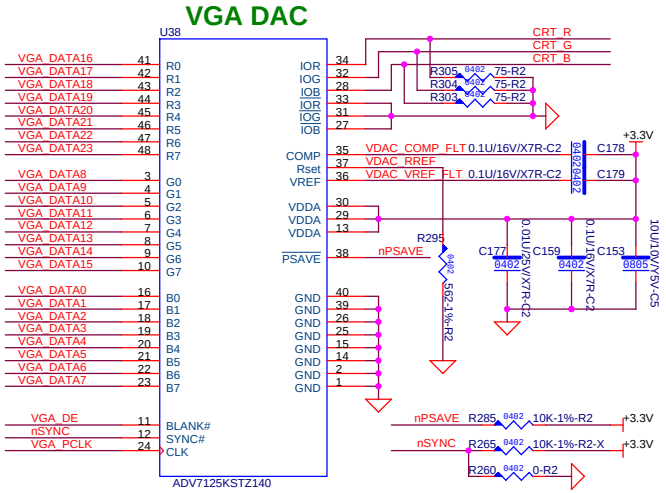


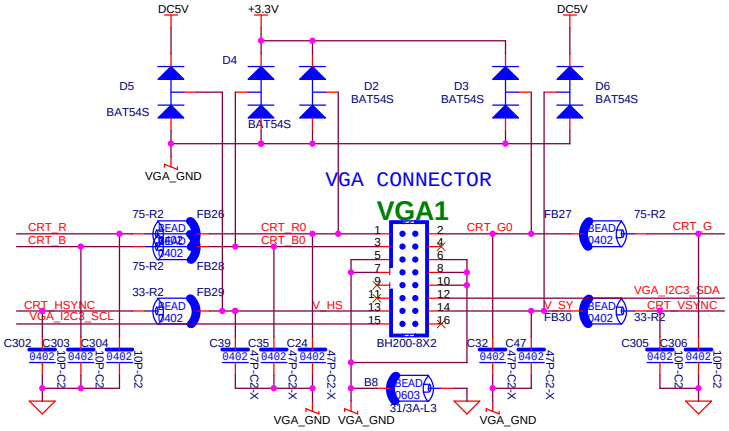


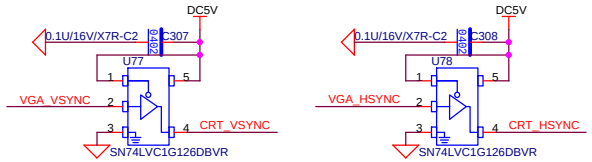


**TechNexion**

Title: Amplifier & VGA

| Size | Document Number | Rev |
|---|---|---|
| Custom | BLIZZARD | A |

Date: Wednesday, August 24, 2011 Sheet 8 of 12

## RS-422/485

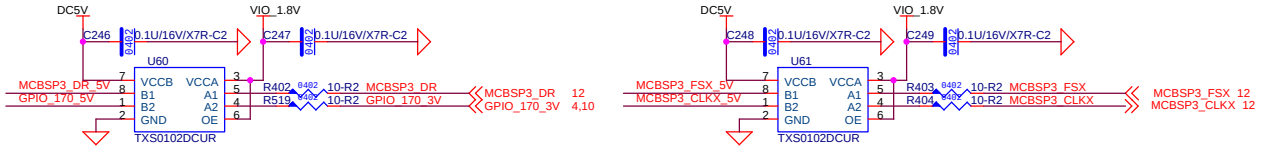


## RS-422/485 SELECT

| SW2 | RS-422 | RS-485 |
|---|---|---|
| 1-4 | Short | Open |
| 2-3 | Open | Short |

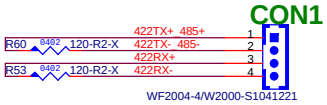


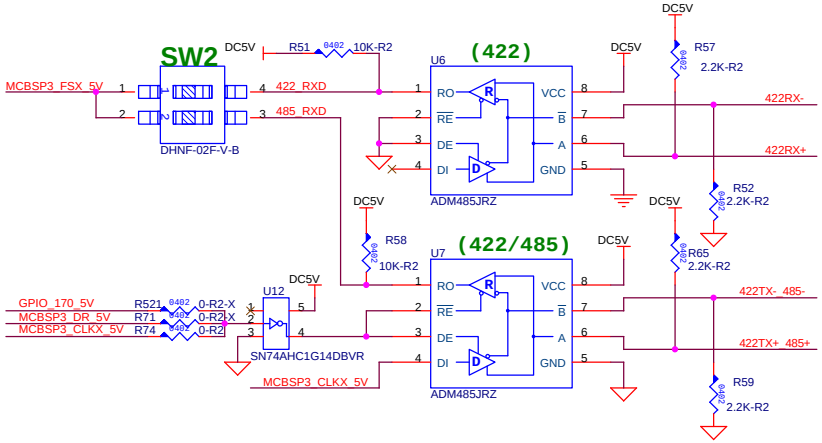


## Level Shift

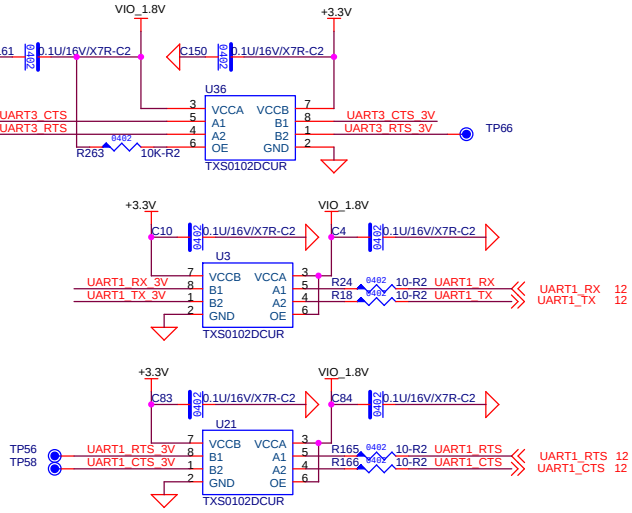


## IR

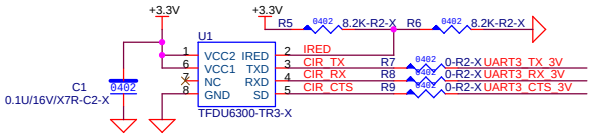


## UART

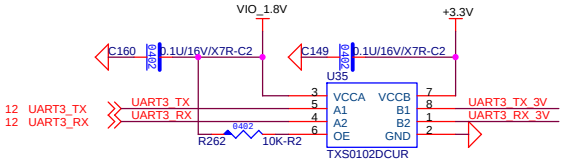


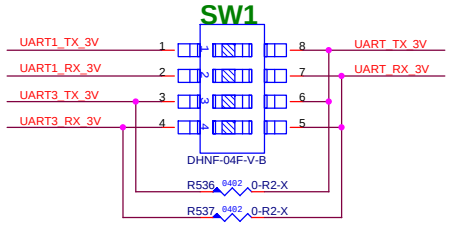


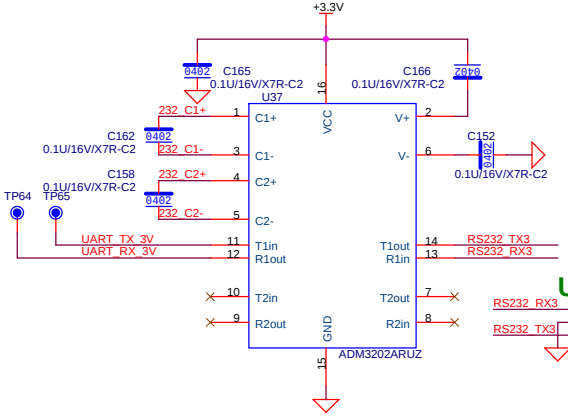


| | |
|---|---|
| TechNexion | |
| Title | UART & RS422/485 & IR |
| Size Custom | Document Number BLIZZARD |
| Rev | A |
| Date: Wednesday, August 24, 2011 | Sheet 9 of 12 |

# TV Composite

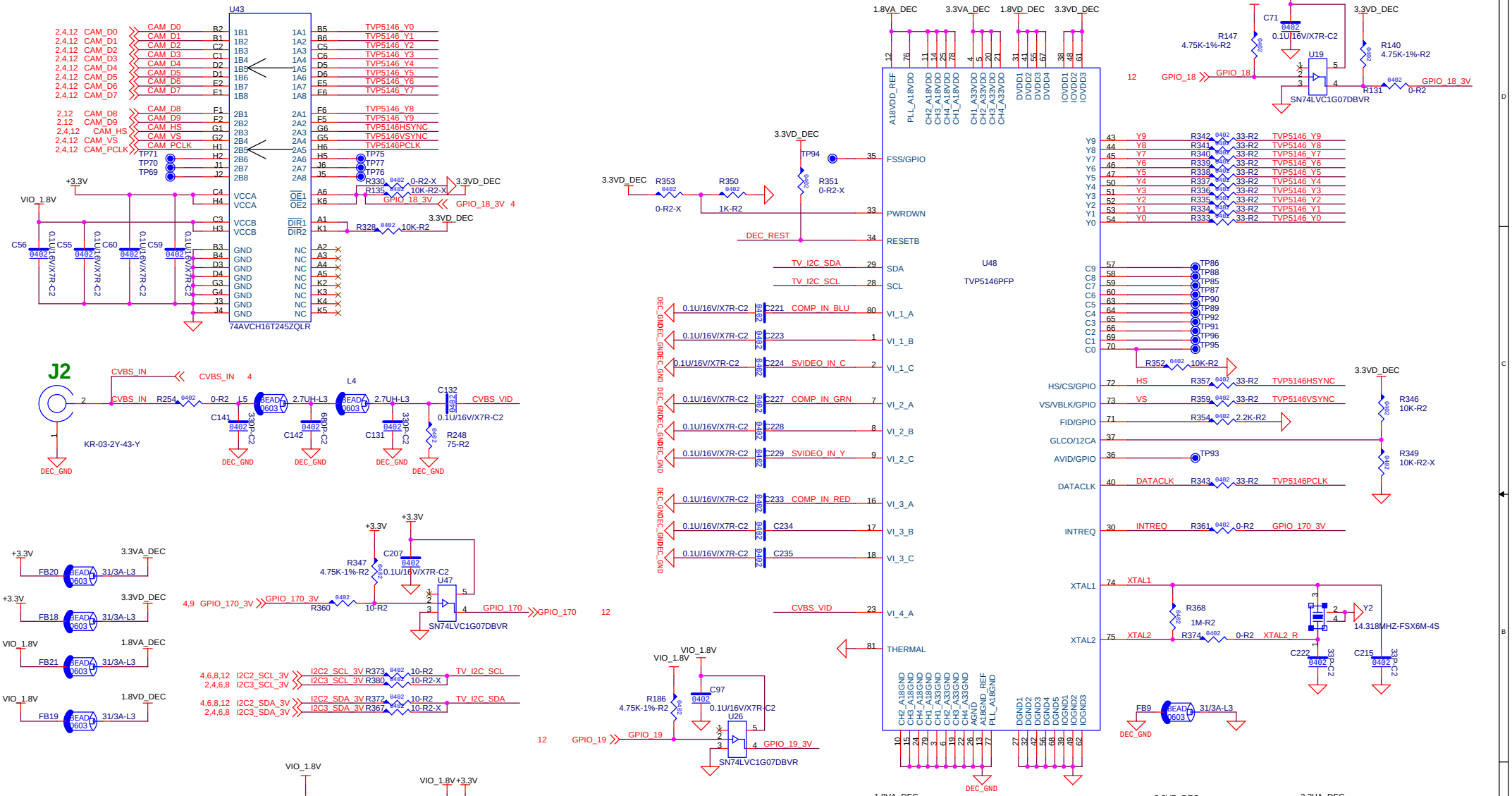


# S-VIDEOUT1

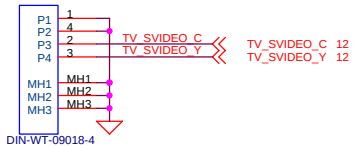


| | |
|---|---|
| Title | TechNexion<br>VIDEO DECODER 5146 |
| Size Custom | Document Number BLIZZARD |
| Rev | A |
| Date: Wednesday, August 24, 2011 | Sheet 10 of 12 |

# HDMI

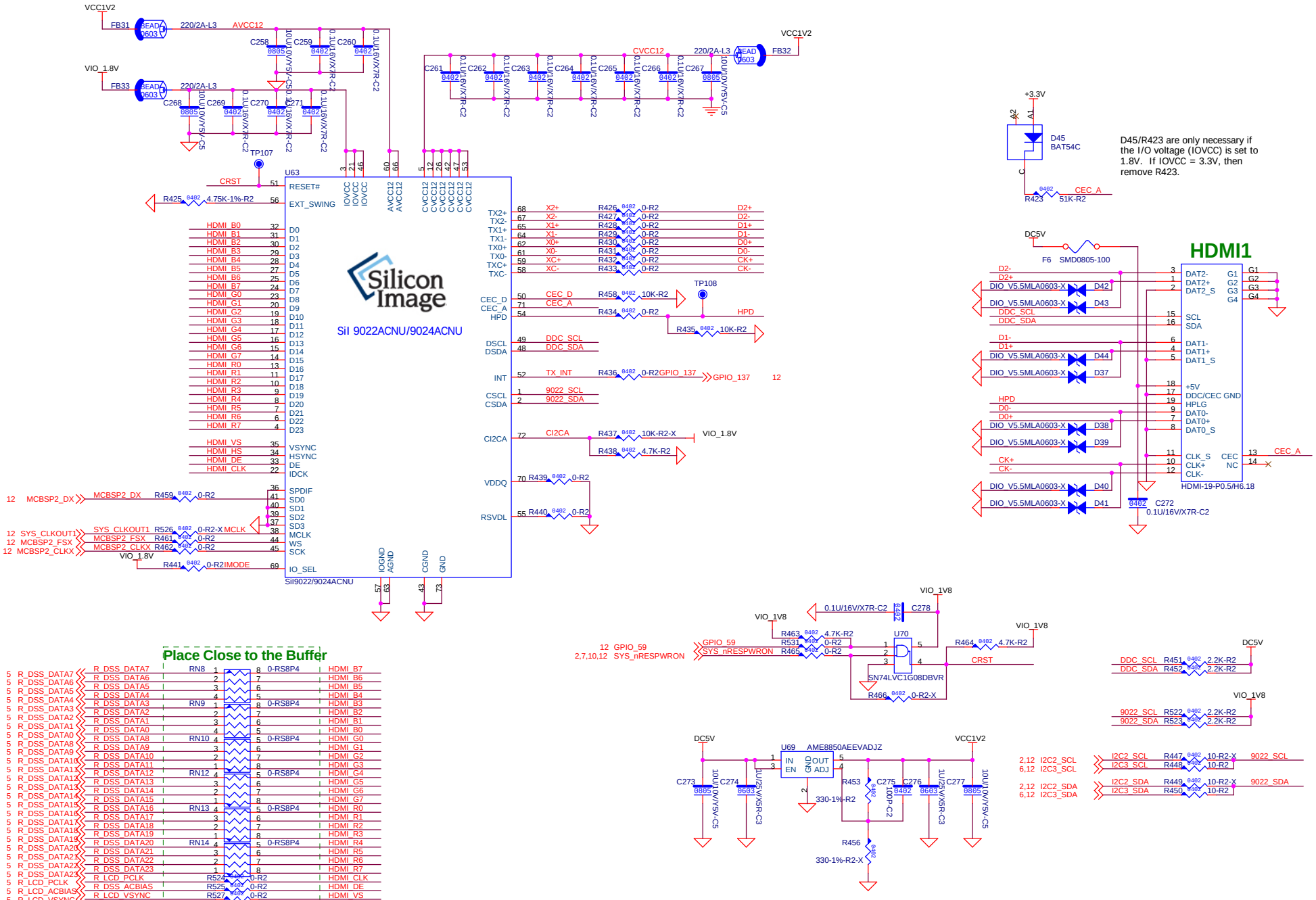


| | |
|---|---|
| TechNexion | |
| Title | SiI9022/9024ACNU |
| Size Custom | Document Number BLIZZARD |
| Rev | A |
| Date: Wednesday, August 24, 2011 | Sheet 11 of 12 |

# Expansion CONN.

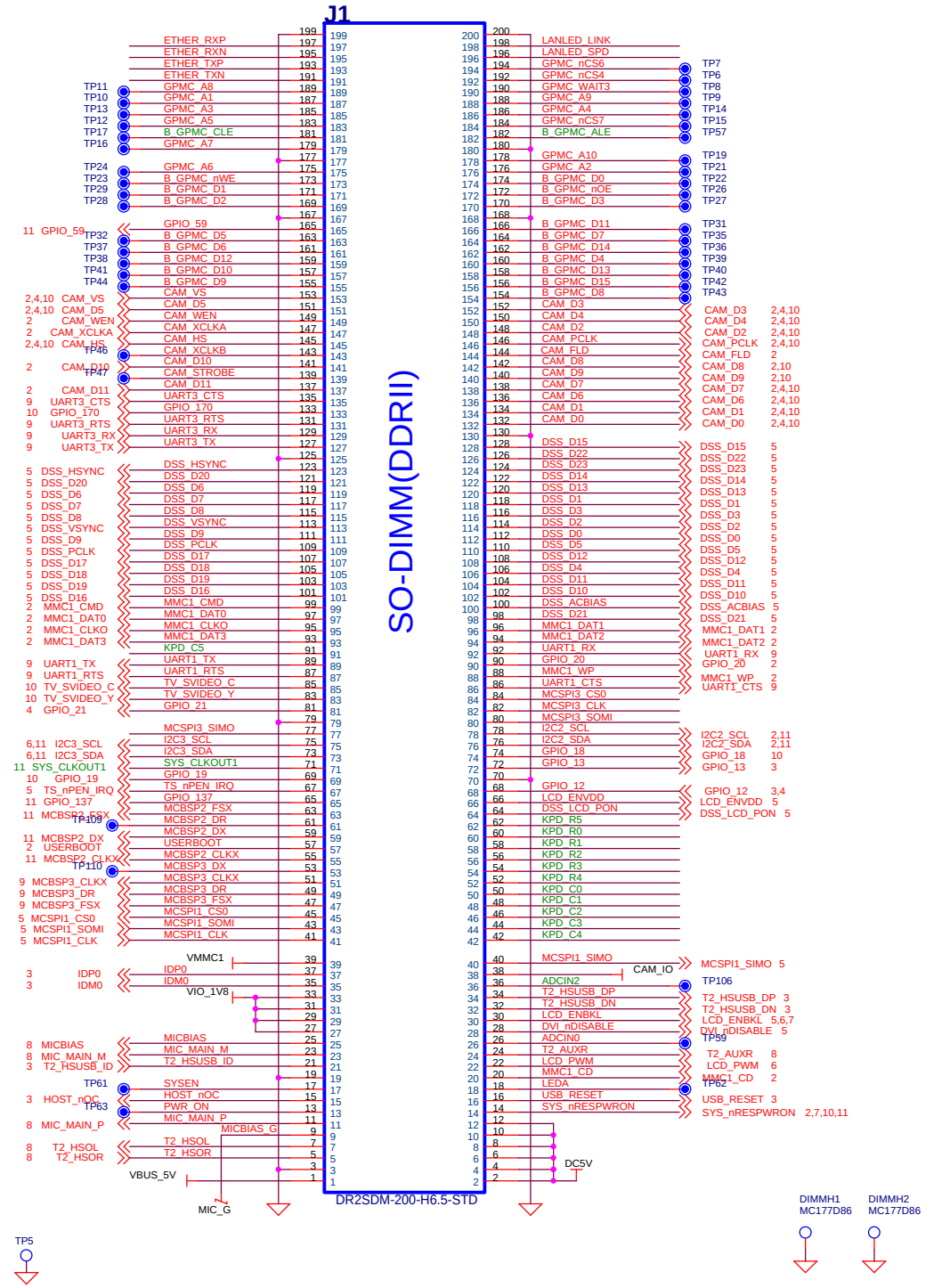


## Keypad

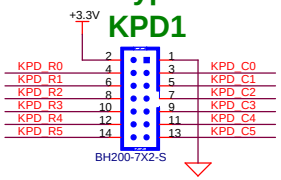


## SPI

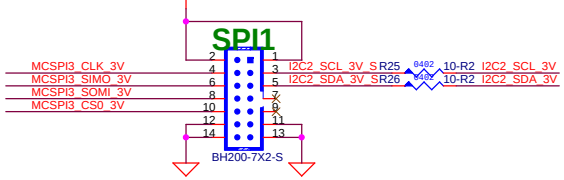


## Level Shift

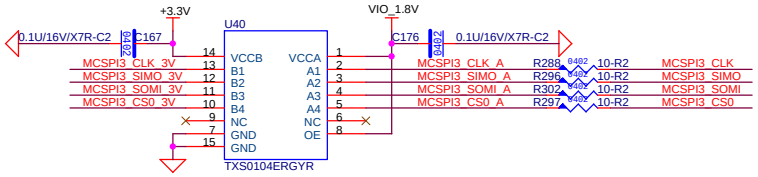


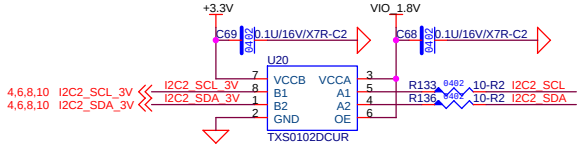


## RJ45

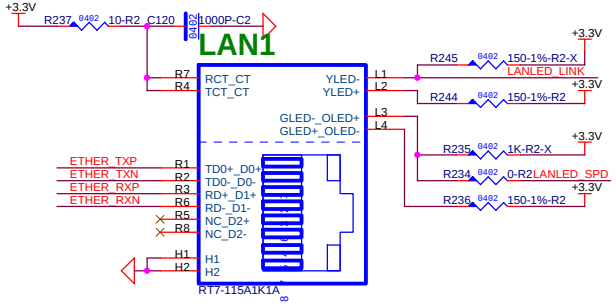


| | | | |
|---|---|---|---|
| TechNexion | | | |
| Title | Board TO Board | | |
| Size Custom | Document Number BLIZZARD | | Rev A |
| Date: Wednesday, August 24, 2011 | Sheet 12 of 12 | | |