Iada=0~4.74A(90W)

ADP_I = 19.9*Iadapter*Rsense

CP = 85%*Iada ; CP = 4.07A

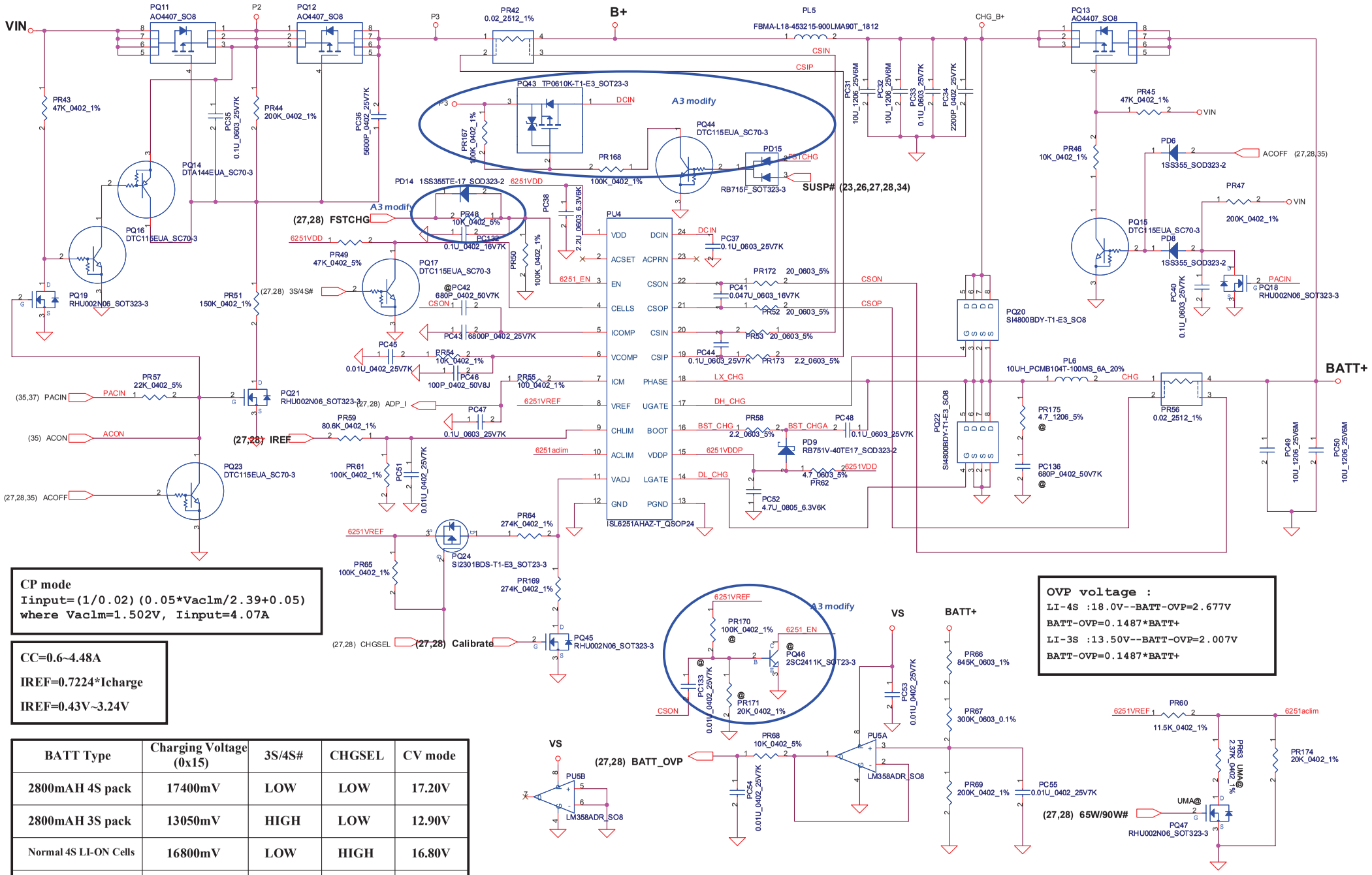

CP mode
Iinput=(1/0.02)(0.05*Vaclm/2.39+0.05)
where Vaclm=1.502V, Iinput=4.07A

CC=0.6~4.48A

IREF=0.7224*Icharge

IREF=0.43V~3.24V

OVP voltage :
LI-4S :18.0V--BATT-OVP=2.677V
BATT-OVP=0.1487*BATT+
LI-3S :13.50V--BATT-OVP=2.007V
BATT-OVP=0.1487*BATT+

BATT Type	Charging Voltage (0x15)	3S/4S#	CHGSEL	CV mode
2800mAH 4S pack	17400mV	LOW	LOW	17.20V
2800mAH 3S pack	13050mV	HIGH	LOW	12.90V
Normal 4S LI-ON Cells	16800mV	LOW	HIGH	16.80V
Normal 3S LI-ON Cells	12600mV	HIGH	HIGH	12.60V
Wake up charge while no communication	-	HIGH	HIGH	12.60V

Security Classification	Compal Secret Data		
Issued Date	2006/09/01	Deciphered Date	2007/09/01

THIS SHEET OF ENGINEERING DRAWING IS THE PROPRIETARY PROPERTY OF COMPAL ELECTRONICS, INC. AND CONTAINS CONFIDENTIAL AND TRADE SECRET INFORMATION. THIS SHEET MAY NOT BE TRANSFERED FROM THE CUSTODY OF THE COMPETENT DIVISION OF R&D DEPARTMENT EXCEPT AS AUTHORIZED BY COMPAL ELECTRONICS, INC. NEITHER THIS SHEET NOR THE INFORMATION IT CONTAINS MAY BE USED BY OR DISCLOSED TO ANY THIRD PARTY WITHOUT PRIOR WRITTEN CONSENT OF COMPAL ELECTRONICS, INC.

Compal Electronics, Inc.

Title: CHARGER

Size: | Document Number: ICW50/ICY70 | Rev: 1.0

Date: Friday, April 20, 2007 | Sheet 38 of 42