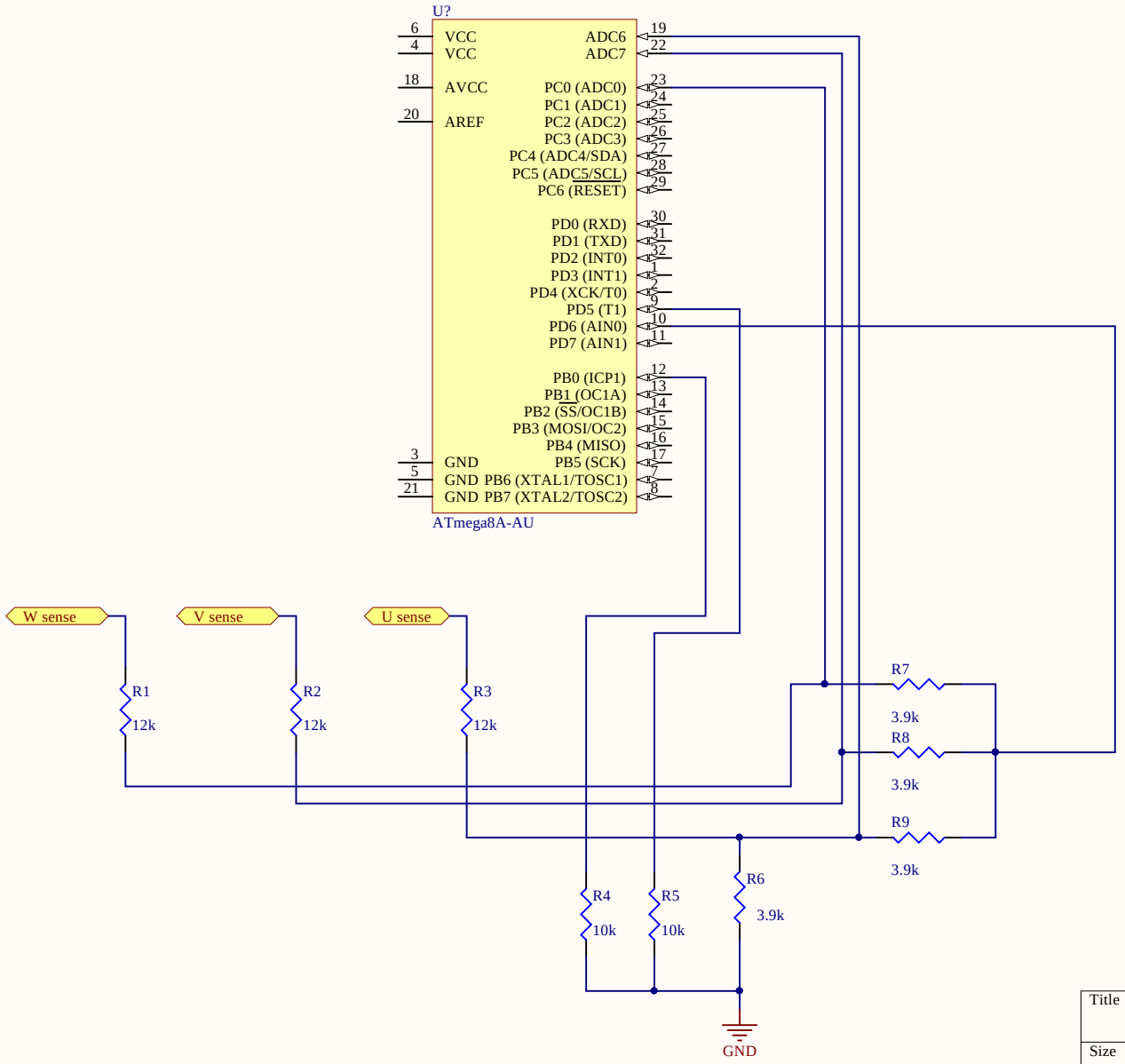

Title		
Size A4	Number	Revision
Date: 08.06.2018	Sheet of	
File: D:\Altium_Projects\TKMP\Sheet1.SchDoc	Drawn By:	