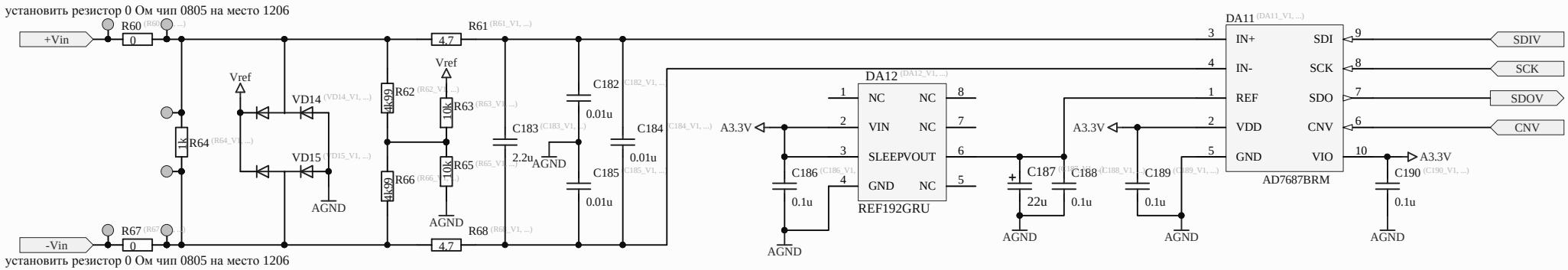

Title		
Size A4	Number	Revision
Date: 27.04.2017		Sheet of
File: D:\Work\PCB\BCP\v5.3\Project\Vin.SchDoc		Drawn By: